Earth-Rite® MULTIPOINT II

Static Grounding System

ATEX IECEx C US

The **Earth-Rite® MULTIPOINT II** is a unique static grounding systems that can monitor the simultaneous grounding of up to eight (8) individual pieces of equipment at risk of discharging electrostatic sparks.

Enquiry > Click here to submit a product related query or a request for quotation.

To ground and monitor multiple items of equipment at points like multi drum loading stations and mixing stations, IBC loading stations and railcar loading gantries, a large number of conventional static grounding systems would be required to provide protection against incendive electrostatic sparks. In addition to flammable liquid and gas operations, powder processing equipment that typically includes interconnected pipes, fluid bed dryers, hoppers and micronizers would require multiple grounding systems. With the Earth-Rite MULTIPOINT II up to eight individual items of potentially isolated equipment can be ground monitored simultaneously with a single static grounding system.

The Earth-Rite MULTIPOINT II is an ATEX / IECEx / cCSAus certified static grounding system which identifies when equipment exceeds ground resistance levels outlined in codes of practice including CLC/TR 60079-32-1 and NFPA 77. The system consists of a hazardous area monitoring unit that contains eight pairs of red and green LED indicators that verify when the equipment at risk of static charge accumulation has a resistance of 10 ohms or less to the plant's designated true earth grounding point.

For applications where ground monitoring indication is required at the point of operation (e.g. drum filling) local ground status indicator stations can be specified. The Intrinsically Safe indicator stations can be mounted in any EX/HAZLOC atmosphere, are more energy efficient than mains powered indicators and more cost effective than standard EX certified indicators.

Each monitoring channel interfaces with it an individual volt free contact as standard. In addition to the 8 individual volt free contacts a group relay is provided so that multiple ground monitoring channels can be setup to provide a permissive / non-permissive condition to external equipment (e.g. PLCs, pumps, valves, sounders). If a software or hardware error is detected by the Earth-Rite MULTIPOINT II's self-monitoring function, it activates a fault relay ensuring the system shuts down in a fail-safe condition.

Earth-Rite MULTIPOINT II Static Grounding System

Earth-Rite MULTIPOINT II applications include:

> multiple railcar loading points.
> multiple drum / tote loading points.
> liquid / powder mixing and blending.
> powder conveying equipment.
> fluid bed dryers.
> silo / container filling and emptying.
> hoppers and dust collectors.
> powder micronizing, pulverising and grinding equipment.

Newson Gale | For over 30 years Newson Gale has been supplying the chemical and processing industry worldwide with its market leading range of static control products ensuring people and plant are protected from static related fires and explosions.

Earth-Rite® MULTIPOINT II Static Grounding System

The **Earth-Rite MULTIPOINT II** builds on the success of its predecessor offering equipment specifiers an advanced digitally embedded system that actively monitors the grounding of up to 8 separate items of plant equipment.

The incorporation of embedded digital technology enables the **Earth-Rite MULTIPOINT II** to:

> offer unrivalled precision with which a grounding system can monitor EX/HAZLOC grounding and bonding circuits.

> self-check the EX/HAZLOC monitored grounding circuits so that permissive conditions are only achieved when a resistance value of 10 ohms or less is seen by the micro-controller.

> offer flexible, energy efficient Intrinsically Safe indicator stations that can be positioned in any Zone or Division around a plant.

> provide an off the shelf system that incorporates an individual SP/DT relay contact for each monitored channel.

> provide a group relay function that enables the grouping of any number of monitored channels via a set of SP/DT relay contacts.

> incorporate software written to the leading industry standard MISRA-C protocol.

> provide a self-monitoring watchdog emergency shutdown function that ensures a fail-safe condition is achieved if a circuit or software malfunction is detected.

The **Earth-Rite MULTIPOINT II's** monitoring unit contains 8 pairs of LED ground status indicators (red and green). The unit can be mounted in all ATEX / IECEx zones and all Class and Division rated hazardous locations.

The **Earth-Rite MULTIPOINT II's** 230 V/110 V AC power supply unit houses eleven (11) SP/DT volt free contacts. 8 of these interface with each monitored grounding channel, 2 provide the grouped channel function and 1 relay provides the fail-safe redundancy output function. The power supply can be installed in Zone 2/21 and Class 1, Div.2, Class II, Div.1, Class III, Div.1 areas. The power supply can be housed in GRP or stainless steel enclosures.

The **Earth-Rite MULTIPOINT II's** energy efficient external indicator stations provide ground status indication for each individual channel. The attention grabbing GREEN LED pulses continuously when a positive ground connection is made. The indicator stations can be mounted in all ATEX / IECEx zones and all Class and Division rated hazardous locations. In addition to the standard GRP option, stainless steel indicator stations can be specified.

The **Earth-Rite MULTIPOINT II's** 4 way and 8 way marshalling junction boxes link the monitoring unit with the external ground connection points and external LED ground status indicator stations. The marshalling boxes can be supplied as GRP and stainless steel.

The Earth-Rite® MULTIPOINT II forms part of the Earth-Rite® range of Static Grounding and Bonding Equipment available from Newson Gale Ltd.

Earth-Rite® MULTIPOINT II Static Grounding System

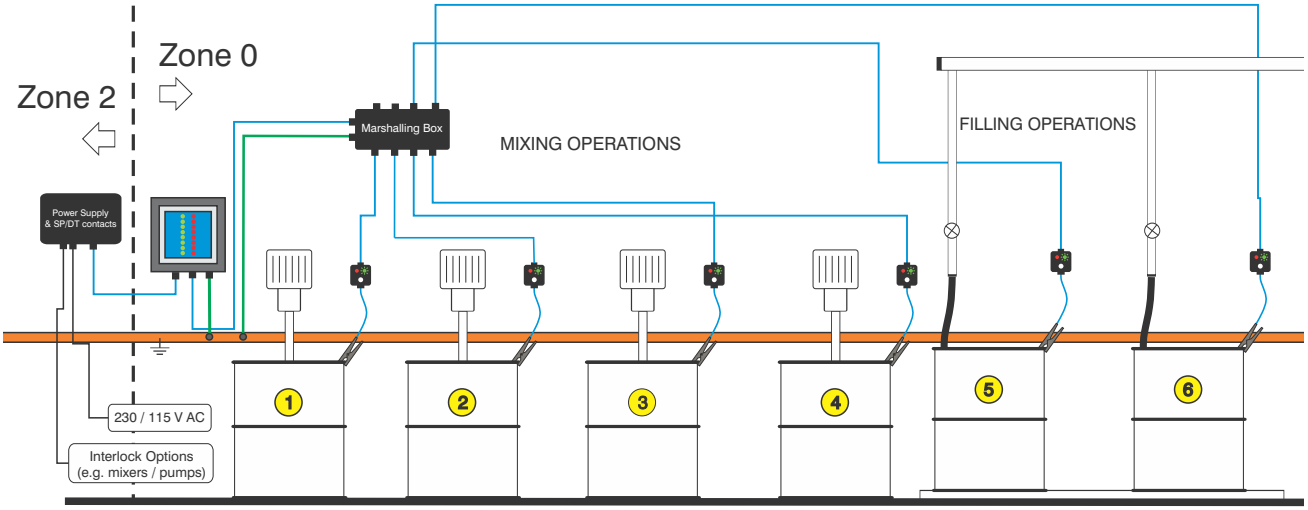

The Earth-Rite MULTIPOINT II's monitoring unit and power supply can be configured to ground and monitor a wide range of equipment. In this example the system is setup to ground four mixing stations (1 to 4) and two filling stations (5 and 6). Each mixer is interlocked with an individual relay corresponding to the equivalent ground monitoring channel. Channels 5 and 6 are grouped via the group relay so that if either drum is not grounded the pump feeding the filling station is shut down immediately, thereby preventing the build up of static on the drums.

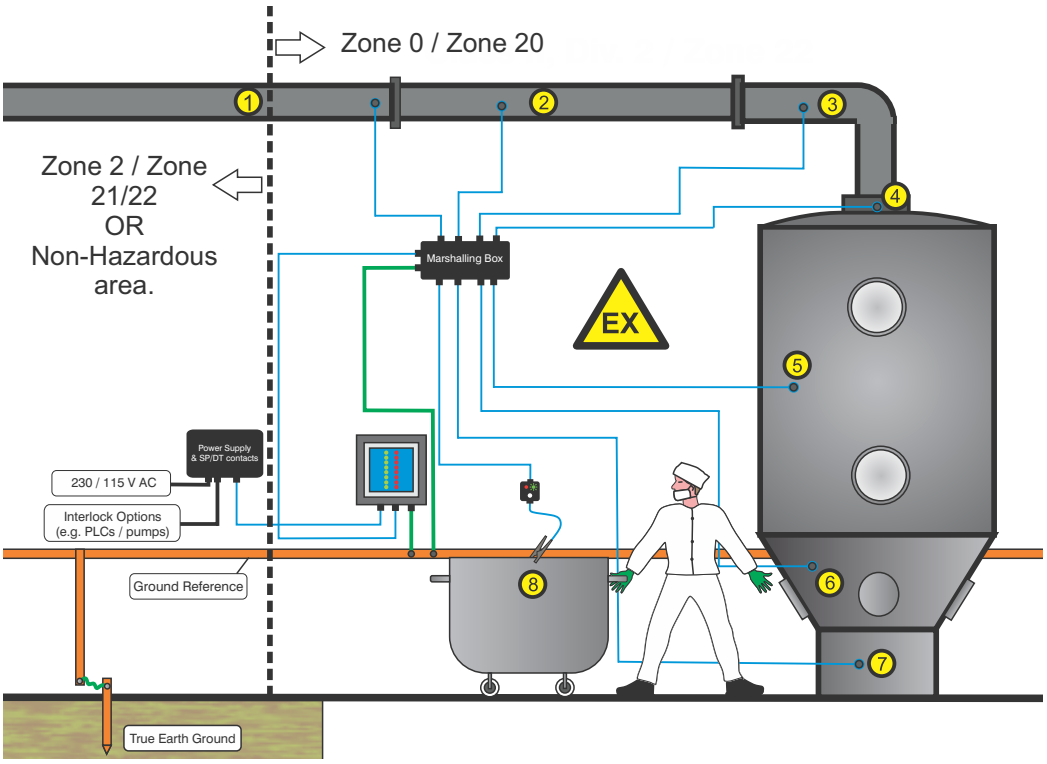

In this example the Earth-Rite MULTIPOINT II is configured to ground multiple interconnected components for a fluid bed dryer system. The marshalling box feeds seven channels out to seven permanent ground connection points [the connection points may be disconnected for routine cleaning, inspection and maintenance].Channels 1 to 7 are grouped together to provide a single output contact controlling the flow of powder into the fluid bed dryer. Channel 8 utilises an external ground status indicator station to provide the operator with a visual confirmation that the mobile bin is grounded when filled.

Earth-Rite® MULTIPOINT II Static Grounding System

Technical Specification (with GRP power supply)

Monitoring unit
Zone 0/20 Installations

Ambient Temperature Range	-40°C to +60°C
Ingress Protection	IP 66
Construction	Stainless Steel 304
Monitoring Circuit	Intrinsically Safe
Operational Series Ground Resistance	Nominally ≤10 Ohm
Cable Entries	3 x M20, 1 x M25

Power Supply Unit
Zone 2/21 Installations

Power Supply	110 V or 240 V AC, 50-60 Hz
Current Rating	200 mA
Power Rating	10 Watts
Ambient Temperature Range	-40°C to +60°C
Ingress Protection	IP 66
Construction	GRP with carbon loading
Output to Monitoring Unit	Intrinsically Safe
Output Channel Relay	8 off Voltage free change over switch contacts
Output Group Relay	2 off Voltage free change over switch contacts
Output Fault Relay	1 off Voltage free change over switch contacts
Relay Contact Rating	240 V AC, 5 A, 500 VA max resistive 30 V DC, 2 A, 60 W max resistive
Cable Entries	12 x M20

Marshalling Junction Box

Enclosure Material	GRP with carbon loading
Cable Entries	8 Way - 10 x M20, 1 x M25 4 Way - 6 x M20, 1 x M25

Remote Indicator Station
Associated Apparatus - Zone 0/20 installation

Enclosure Material	GRP with carbon loading
Cable Entries	1x M20

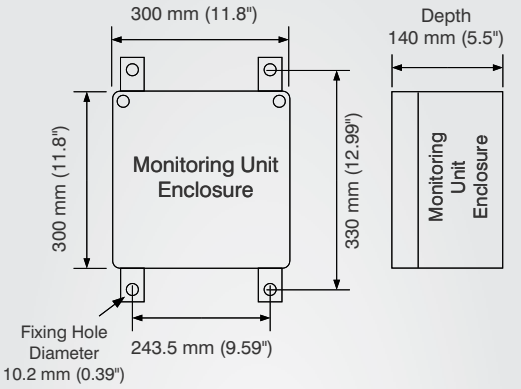

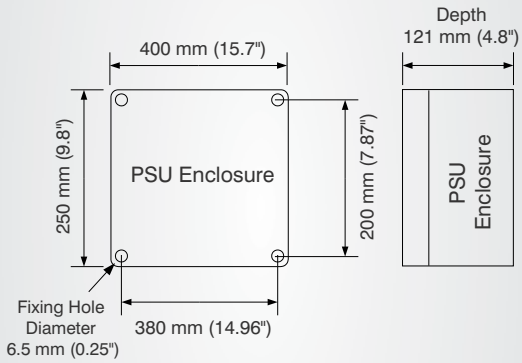

Product Description	Length	Height	Depth
8-Way Junction Box	259 mm	160 mm	91.4 mm
4-Way Junction Box	160 mm	160 mm	94 mm
Remote Indicator Station	122 mm	122 mm	76.2 mm
Junction Box with Stowage Pin	80 mm	76.2 mm	55.9 mm

For more detailed mechanical descriptions please refer to instruction manual

Earth-Rite® MULTIPOINT II Static Grounding System

Technical Specification (with stainless steel power supply)

Monitoring unit
Zone 0/20 Installations

Ambient Temperature Range	-40°C to +60°C
Ingress Protection	IP 66
Construction	Stainless Steel 304
Monitoring Circuit	Intrinsically Safe
Operational Series Ground Resistance	Nominally ≤10 Ohm
Cable Entries	3 x M20, 1 X M25

Power Supply unit
Zone 2/21 Installations

Power Supply	110 V or 240 V AC, 50-60 Hz
Current Rating	200 mA
Power Rating	10 Watts
Ambient Temperature Range	-40°C to +60°C
Ingress Protection	IP 66
Construction	Stainless Steel 304
Output to Monitoring Unit	Intrinsically Safe
Output Channel Relay	8 off Voltage free change over switch contacts
Output Group Relay	2 off Voltage free change over switch contacts
Output Fault Relay	1 off Voltage free change over switch contacts
Relay Contact Rating	240 V AC, 5 A, 500 VA max resistive 30 V DC, 2 A, 60 W max resistive
Cable Entries	12 x M20

Marshalling Junction Box

Enclosure Material	Stainless Steel 304
Cable Entries	8 Way - 10 x M20, 1 x M25 4 Way - 6 x M20, 1 x M25

Remote Indicator Station
Associated Apparatus - Zone 0/20 installation

Enclosure Material	Stainless Steel 304
Cable Entries	1x M20

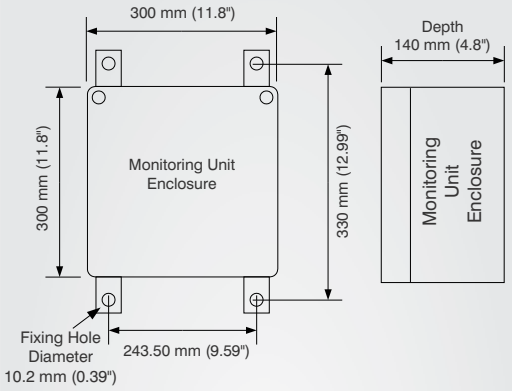

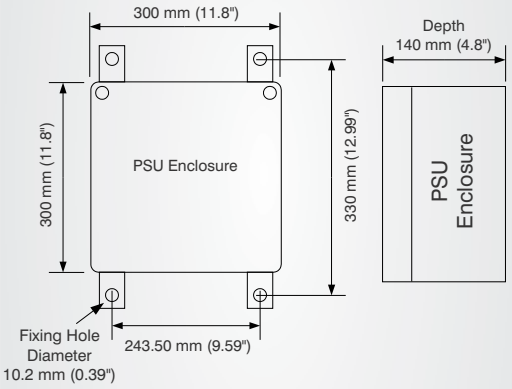

Product Description	Length	Height	Depth
8-Way Junction Box	300 mm	201 mm	81 mm
4-Way Junction Box	150 mm	150 mm	81 mm
Remote Indicator Station	150 mm	150 mm	81 mm
Junction Box with Stowage Pin	150 mm	150 mm	81 mm

For more detailed mechanical descriptions please refer to instruction manual

Earth-Rite® MULTIPOINT II Static Grounding System

Hazardous Area Certification

Monitoring Unit

Europe / International:	North America:
IECEx Ex ia IIC T4 Ga Ex ia IIIC T135ºC Da Ta = -40ºC to +60ºC. IECEx SIR 15.0094X IECEx certifying body: SIRA. **ATEX** Ⓔx II 1GD Ex ia IIC T4 Ga Ex ia IIIC T135ºC Da Ta = -40ºC to +60ºC. Sira 15ATEX2259X ATEX Notified Body: SIRA.	**NEC 500 / CEC (Class & Division)** Intrinsically Safe Equipment Ex ia for use in Class I, Div. 1, Groups A, B, C, D; Class II, Div. 1, Groups E, F, G; Class III, Div. 1, When installed per Control Dwg; X MPII Q15152 cCSAus Ta = -40°C to +60°C. Ta = -40°F to +140°F. OSHA recognised NRTL: CSA. CSA 15.70005381 **NEC 505 & 506 (Class & Zoning)** Class I, Zone 0, AEx ia IIC T4 Ga (gas & vapour). Class II, Zone 20, AEx ia IIIC T135°C Da (combustible dusts). **CEC Section 18 (Class & Zoning)** Ex ia IIC T4 Ga Ex ia IIIC T135°C Da

Power Supply Unit

Europe / International:	North America:
IECEx Ex nA[ia Ga] nC IIC T4 Gc Ex tb IIIC T65ºC Db Ta = -40ºC to +60ºC. IECEx SIR 15.0094X IECEx certifying body: SIRA. **ATEX** Ⓔx II 3(1)G II 2D Ex nA[ia Ga] nC IIC T4 Gc Ex tb IIIC T65ºC Db Ta = -40ºC to +60ºC. Sira 15ATEX2259X ATEX Notified Body: SIRA.	**NEC 500 / CEC (Class & Division)** Suitable for use In Class I, Div. 2, Groups A, B, C, D; Class II, Div. 1, Groups E, F, G; Class III, Div. 1; Provides intrinsically safe output for Class I, Div. 1, Groups A, B, C, D; Class II, Div. 1, Groups E, F, G; Class III, Div. 1; When installed per Control Dwg; X MPII Q15152 Ta = -40°C to +60°C. Ta = -40°F to +140°F. OSHA recognised NRTL: CSA. CSA 15.70005381 **NEC 505 & 506 (Class & Zoning)** Class I, Zone 2, AEx nA[ia Ga] nC IIC T4 Gc (Gas & vapour). Class II, Zone 21,AEx tb IIIC T65°C Db (Combustible Dusts). **CEC Section 18 (Class & Zoning)** Ex nA[ia Ga] nC IIC T4 Gc Ex tb IIIC T65°C Db

Additional Certification

EMC Tested:	to EN 61000-6-2, EN 61000-6-3 FCC - Part 15

Earth-Rite® MULTIPOINT II Static Grounding System

Application Spotlight: Grounding multiple components in multiple EX/HAZLOC operations

Static grounding solutions: convention versus flexibility.

Most grounding solutions provide grounding protection for discrete pieces of equipment at risk of electrostatic charging like railcars, IBCs and drums. Multiple loading points for such equipment presents more of a challenge.

A more specialised static grounding system, like the Earth-Rite MULTIPOINT II, provides the benefits of eight discrete static grounding systems rolled up into a single package. This gives installer's the flexibility of providing monitored static grounding protection for multiple items of equipment.

In addition, the Earth-Rite MULTIPOINT II will continuously check that all components are connected to a reference earth grounding point, thus ensuring that the ground path resistance between the equipment and the reference ground never exceeds 10 ohms. A monitored ground path resistance of 10 ohms or less is recommended in NFPA 77, "Recommended Practice on Static Electricity" and IEC 60079-32-1, "Explosive atmospheres: electrostatic hazards, guidance".

If the Earth-Rite MULTIPOINT II's monitoring unit detects that an object is not grounded, it will send a signal to the system's relays which, if interlocked with the circuit powering the operation, can halt the process, thereby eliminating the electrostatic charging mechanism and potential charging of un-grounded equipment.

If such an event does occur, the plant's technicians can rapidly identify which connection needs to be investigated. They can do this by referencing the monitoring unit's ground status indicator panel which will indicate which channel needs to be checked. Once the connection to the equipment is re-established the Earth-Rite MULTIPOINT II's controller will provide a permissive condition for the process to start again.

Earth-Rite MULTIPOINT II Static Grounding System

The most common set up, from an interlock option perspective, is to halt the entire process via the system's volt free contacts located in the power supply unit. Halting the movement of the product ensures that electrostatic charges are not being generated while a piece of plant equipment does not have grounding protection in place.

Although 8 ground monitoring channels are provided, not all may be required. For example, if only 5 items require static grounding protection, only 5 channels need to be utilised. However, the available 3 channels may be used at some point in the future should any modifications to the process require the addition of more plant equipment.

Earth-Rite® MULTIPOINT II Static Grounding System

Product Ordering Codes

Ordering Code	Product Description
MP2PSUG4MBG	An Earth-Rite MULTIPOINT II Monitoring Unit, SS304 with window, Power Supply & Relay unit - GRP, 8 Channel, 2 Group & 1 Fault Relays (115 V AC & 230V AC, 50/60 Hz) ATEX, IECEx & cCSAus, 4-Way Marshalling Box - GRP
MP2PSUG8MBG	An Earth-Rite MULTIPOINT II Monitoring Unit, SS304 with window, Power Supply & Relay unit - GRP, 8 Channel, 2 Group & 1 Fault Relays (115 V AC & 230V AC, 50/60 Hz) ATEX, IECEx & cCSAus, 8-Way Marshalling Box - GRP
MP2PSUS4MBS	An Earth-Rite MULTIPOINT II Monitoring Unit, SS304 with window, Power Supply & Relay unit - SS304, 8 Channel, 2 Group & 1 Fault Relays (115 V AC & 230V AC, 50/60 Hz) ATEX, IECEx & cCSAus, 4-Way Marshalling Box - SS304
MP2PSUS8MBS	An Earth-Rite MULTIPOINT II Monitoring Unit, SS304 with window, Power Supply & Relay unit - SS304, 8 Channel, 2 Group & 1 Fault Relays (115 V AC & 230V AC, 50/60 Hz) ATEX, IECEx & cCSAus, 8-Way Marshalling Box - SS304
MP2/RIS/GRP	An Earth-Rite MULTIPOINT II Remote Indicator Station, GRP - Red/Green LED's and Universal Stowage Point
MP2/RIS/SS	An Earth-Rite MULTIPOINT II Remote Indicator Station, SS304 - Red/Green LED's and Universal Stowage Point
VESX90-IP	SS304, Large, 2 pole static grounding with Tungsten carbide teeth - ATEX/FM approved Ex II 1 GD T6
VESX45-IP	SS304, Medium, 2 pole static grounding clamp with Tungsten carbide teeth - ATEX/FM approved Ex II 1 GD T6
JP1QFSPE	GRP Junction Box c/w Bulkhead Socket + Universal Stowage Pin

Due to the unique nature of each application, each inquiry must be reviewed by our team of specialist engineers to provide the best solution to suit our customers needs.

Contact Us > Your enquiry will be processed rapidly via our webform enquiry service. If you would prefer to call us, or e-mail us, please use the contact details provided below.

United States
Newson Gale Inc
460 Faraday Avenue
Bldg C
Jackson, NJ 08527
USA
+1 732 961 7610
groundit@newson-gale.com

United Kingdom
Newson Gale Ltd
Omega House
Private Road 8
Colwick, Nottingham
NG4 2JX, UK
+44 (0)115 940 7500
groundit@newson-gale.co.uk

Deutschland
Newson Gale GmbH
Ruhrallee 185
45136 Essen
Deutschland
+49 (0)201 89 45 245
erdung@newson-gale.de

South East Asia
Newson Gale S.E.A. Pte Ltd
136 Joo Seng Road
#03-01
Singapore
368360
+65 6704 9461
ngsea@newson-gale.com

www.newson-gale.co.uk

NG UK MULTIPOINT II 300616 R2